Wall-Hung Toilet W/Toilet Seat & Cover

6371-A0-8000

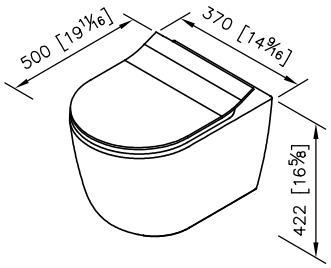

unit: mm[inch]
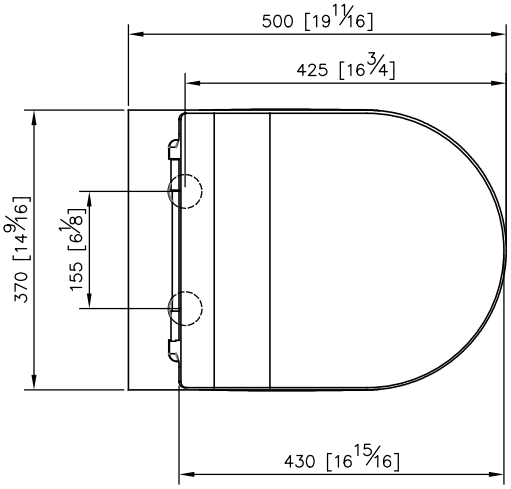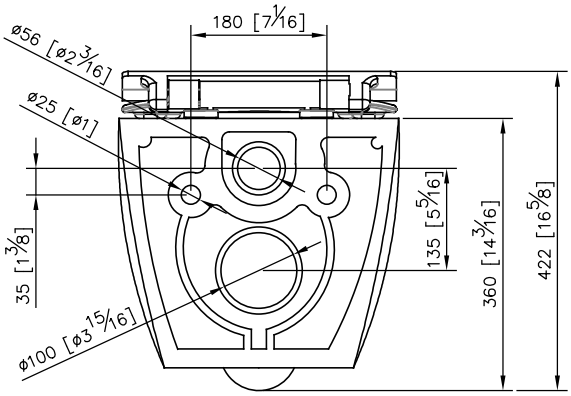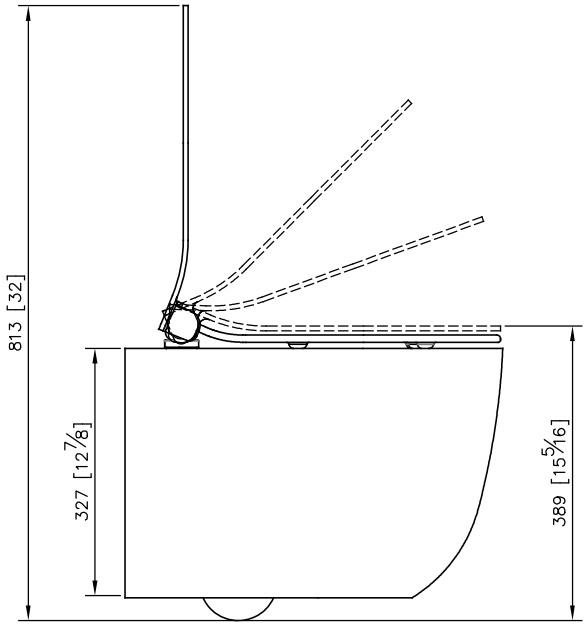
1.Weigh Resistance: Installation components are corrosion resistant and are able to withstand 400kg of weight resistance.
2.Rimless design without joint is easy to clean and maintain.
3.Toilet seat cover is equipped with damping technology for closing quietly and extending lifespan.
4.With supreme glaze coating applied to surface, it's able to reduce grime & lime scale accumulation, enabling residues to flow away easier.
5.High-efficiency Vortex Flush system releases a powerful water stream and creates a whirlpool effect which effectively removes waste and cleans the surface.